TECHNICAL DATA

Interpump Hydraulics International

Light duty cylinder, eye - pins | **Part Number** **3102900753004** | **Tipping weight** **4-9 ton**

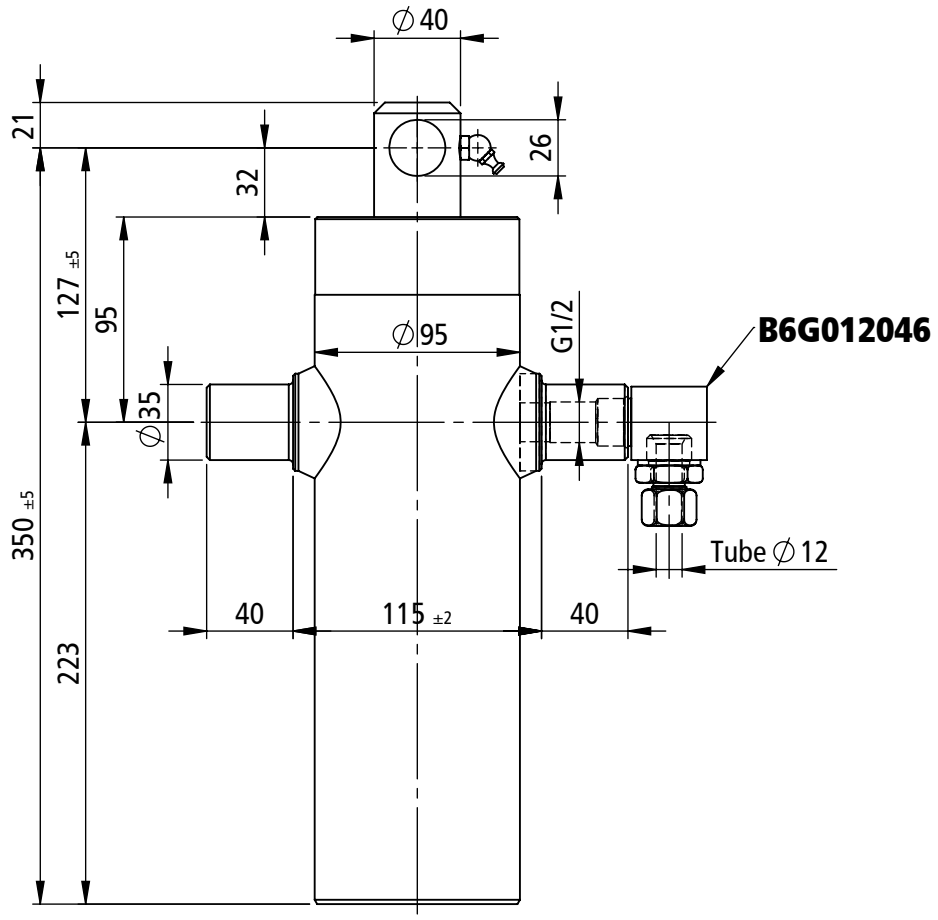

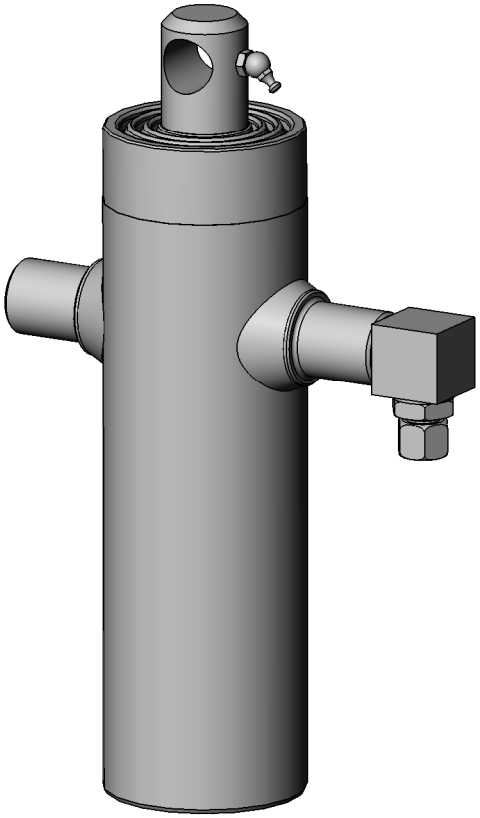

mounting dimension	**127 mm + 20 (-5;+30) mm min pull out**	**total stroke**	**650 mm**	**max pressure**	**220 bar**
model: BL290 650 75 3 CRLZB	**code: 3102900753004**	**weight: 16 kg**		**1222 001196**	

extension	1	2	3	-	-	-	-	-	-	--	--	**number of stages: 3**
diameter [mm]	75	60	45	--	--	--	--	--	--	--	--	
stroke [mm]	213	216	221	--	--	--	--	--	--	--	--	**total: 650 mm**
thrust [kN] at pmax	97	62	35	--	--	--	--	--	--	--	--	**max admitted thrust: 41 kN**
oil [dm³]	0.9	0.6	0.4	--	--	--	--	--	--	--	--	**total: 1.9 dm³**

TECHNICAL NOTES AND SPECIFICATIONS

User responsibility. Incorrect selection or incorrect use of the here described component and its related items may cause death, personal injury and property damage. All the information here reported are intended for further investigations by users with technical knowledge. The user, as manufacturer of the completed machinery which will incorporate the here described components, is the solely responsible for the final selection of the components. The user must carry out necessary research and tests on components to determine whether, by its design and construction, all performance, endurance, maintenance, safety and warning requirements are met. The user must assure the compliance of the completed machinery with all appropriate laws, directives, norms, industry standards.
The normal application of telescopic cylinder is to lift up tipping bodies, loaded with different materials, and consequently discharge this material whilst the cylinder is extended all along its stroke.
The cylinder has been designed to provide only a linear pushing force. The cylinder is not a structural member and must not be used as a stabilizer or be subject to side or pulling load. The cylinder will not prevent the dump body or trailer from rollover or lateral tilt.
The body weight plus the max payload are the max tipping weight that can be raised by the cylinder. This value, calculated at the max pressure, is a rough indication of the tipping power of the cylinder and must be used as a first criteria for the selection of the cylinder. The real tipping mass can only be calculated by the design engineer of the completed machinery, and must take into account the geometry of the dump body, operating conditions and all reasonably foreseeable uses.

Refer to www.hspenta.it for mounting instructions, bracket details, hydraulic oil specification, user & maintenance, service, general precautions, general guarantee conditions.
Never exceed the herein specified limits of the cylinder.
Cylinder rated pressure reflect only the capability of the pressure-containing envelope and not the force transmitting capability of mounting configurations.
The ordinary use of telescopic cylinder will not require any coating since the telescopic stages are exposed to atmospheric agents only during the tip-up operation, if duration is below 2 hours. Surface coatings can be supplied on request. H.S.PENTA warranty does not apply to any kind of corrosion of coated or non-coated parts.
When closed, leave the tipping control in descent position. The exposed surface of first moving stage may get rusty, but it will not affect the functionality of the cylinder.
Maximum extension speed less than 0.5 m/s.
Hydraulic oil temperature admitted between -40°C and +100°C.
In case the cylinders must be stored, do not remove the package. Store them in a dry place, not exposed to rain. Do not store the cylinders for more than 6 months.
User shall pay attention to stroke length, loading and cylinder mounting in order to avoid bending or buckling of the cylinder at any position.
Chrome coating type CRL (min. thickness 5 µm) on telescopic stages. Zinc coating type ZB (min. thickness 5 µm) on base tube and ram base.

REMARKS **[2013.12.18] [----.--.--]**

.

Firma non verificata

Andrea Rossi
2013.12.18 14:22:28 +01'00'
Sono l'autore di questo documento

REVISIONS

.	01
	02

Emesso: 2013.09.26

Firma non verificata

Alberto Cavina
2013.12.18 16:23:48 +01'00'
Ho rivisto questo documento.